THIS COPY IS PROVIDED ON A RESTRICTED BASIS AND IS NOT TO BE USED IN ANY WAY DETRIMENTAL TO THE INTERESTS OF PANDUIT CORP.

NOTE.
1. ALL DIMENSIONS ARE REFERENCE ONLY.
2. DIMENSIONS IN PARENTHESES ARE METRIC.
3. DUCT IS AVAILABLE IN 19.7 IN [500] LENGTHS.

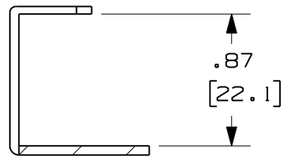

SECTION A - A

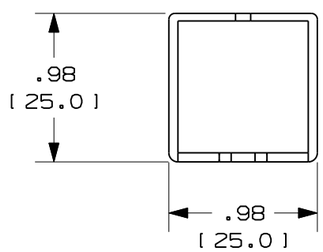

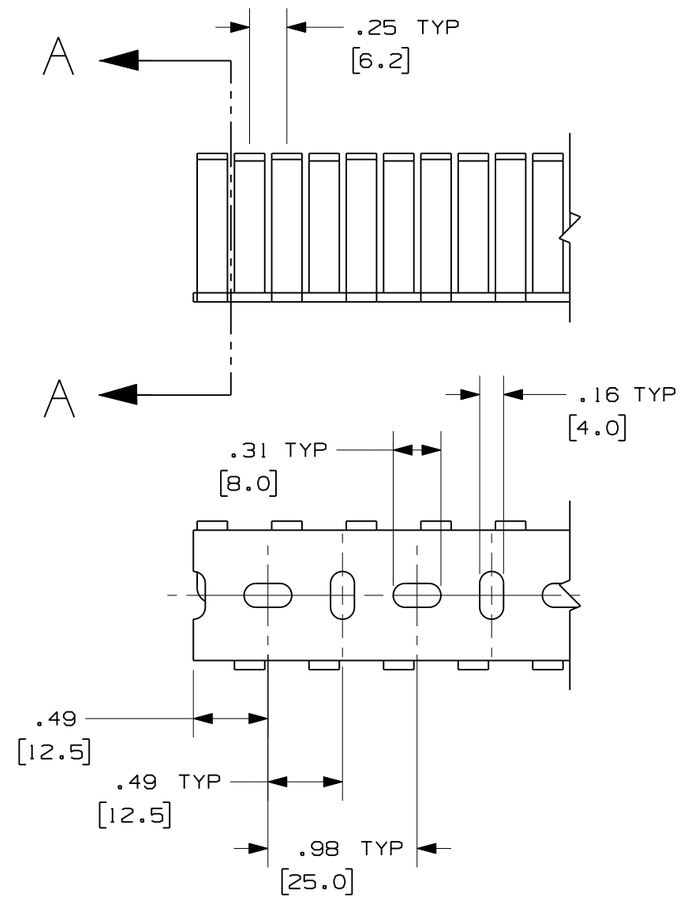

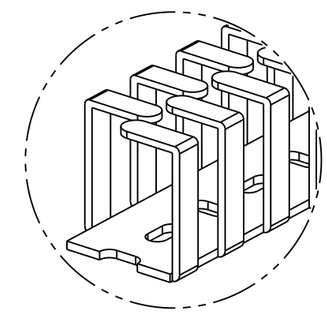

REV	DATE	BY	CHK	DESCRIPTION
R	10/13/08	JCST	MKBE	DRAWING RELEASED

CAD FILENAME/LAYERS: D110000L_DC_FL25x25/00A

PANDUIT CORP. TINLEY PARK, ILLINOIS

WIRING DUCT - Type FL
FLEXIBLE DUCT- FL25X25LG
MARKETING DRAWING

DRAWN BY	MAT'L:	SCALE	
JCST	POLYPROPYLENE	FULL	
DATE 10/13/08		DRAWING NO. 36897-1253	DWG B
CHECKED BY MKBE			SIZE